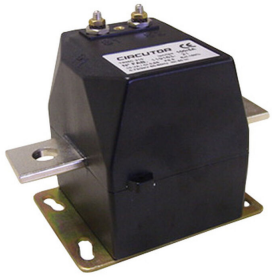

TRMC 210 -0.5S-3X500/5

TRMC 210 -0.5S-3X500/5, set of 3 current transformers for energy meters, class 0,5S

Code: Q30906.

> Class 0,5S Power (VA): 10
> Measurement Range (A): 500/5
> Input current: 500/5 A

Specifications

Mechanical characteristics

Size (mm) width x height x depth	145 x 110 x 86 (mm)
Weight (kg)	5,3

kit3-TRMC210
Kit of 3 current transformers for energy meters, primary winding

CODE	TYPE
Q30901.	TRMC 210 -0.5S-3X100/5
Q30902.	TRMC 210 -0.5S-3X150/5
Q30903.	TRMC 210 -0.5S-3X200/5
Q30904.	TRMC 210 -0.5S-3X300/5
Q30905.	TRMC 210 -0.5S-3X400/5
Q30906.	TRMC 210 -0.5S-3X500/5
Q30907.	TRMC 210 -0.5S-3X600/5
Q309010000001	TRMC 210 -0.5S-3X100/5
Q309020000001	TRMC 210 -0.5S-3X150/5
Q309030000001	TRMC 210 -0.5S-3X200/5
Q309040000001	TRMC 210 -0.5S-3X300/5
Q309050000001	TRMC 210 -0.5S-3X400/5
Q309060000001	TRMC 210 -0.5S-3X500/5
Q309070000001	TRMC 210 -0.5S-3X600/5

Check availability.../1 A

Creation date: 13/03/2026 - CIRCUTOR, SAU reserves the right to make technical changes or modify the content/images of this document without prior notice, in order to improve its reliability, functionality, design or for other reasons.
It accepts no liability for any errors, inaccuracies or possible lack of information in this document.

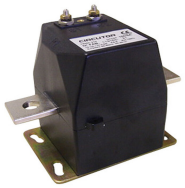

TRMC 210 -0.5S-3X500/5

Code: Q30906.

Dimensions

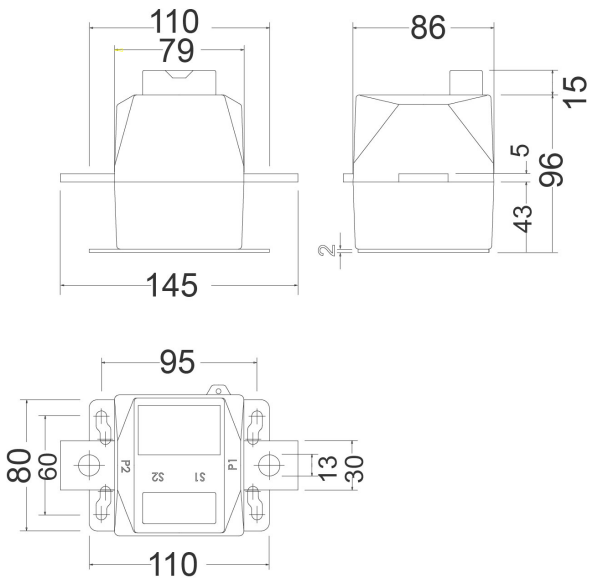
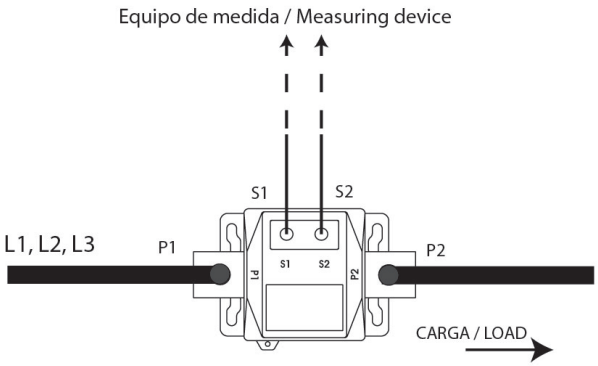
Connections