CVM-C10-FLEX-IN-485-I2

CVM-C10-FLEX-IN-485-I2, Power analyzer panel 96 x 96 compatible with flexible clamps

Code: M55963. **DESCATALOGADO**

> Protocol: Modbus/RTU | BACnet
> Communications: RS-485
> Digital inputs: 2
> Measuring current Channels: 4
> Harmonics: 31
> Input current: Rogowski
> Mounting: Pannel
> Modules: 96 x 96

Description

Compact and versatile power analyser, with 4-quadrant measurement (Consumption and Generation), suitable for High, Medium and Low-Voltage installations, since it can process high voltage:current transformation ratios of up to 2000 A. Measures current with flexible Rogowski sensors.

Capable of adapting to any type of electrical network topology, from single-phase lines, two-phase lines with or without neutral to three-phase lines with or without Neutral. The **CVM-C10-Flex** calculates the sensitivity of the measurement range scale automatically, according to the nominal value of the detected current, up to a full-scale of 2000 A. (Twice the full-scale value of measured current, 1000 A).

The flexible sensors feature a magnetic lock, which allows the sensors to be sealed. They are robust and can withstand frequent assembly and disassembly procedures, thanks to these magnetic lock.

Quick installation on distribution panels or switchboards of the unit, thanks to its flexible current sensors. Self-adjustment of the scale sensitivity. Does not require the current primary to be programmed. (1000 A by default, factory setting). Remote correction of errors associated with the incorrect connection of the unit to the electrical installation via remote communication systems (PowerStudio).

Display features and interface:

- Backlit keypad (capacitive)
- Analogue display for instantaneous parameters (power, maximum power reached and cos φ or PF)
- Backlit display
- Cost by tariff

Operating time indicator for preventive maintenance.

- The unit has the following functions:
- Recording of the energy consumption from three different sources: network, generator set or photovoltaic energy generation system.
- Selection of tariffs with digital inputs. Perfect for calculating costs in three different work shifts.

Application

- Management Systems that require roaming measuring points.
- Distribution panels or switchboards that cannot stop the installation of a measuring unit.

Creation date: 13/03/2026 - CIRCUTOR, SAU reserves the right to make technical changes or modify the content/images of this document without prior notice, in order to improve its reliability, functionality, design or for other reasons.
It accepts no liability for any errors, inaccuracies or possible lack of information in this document.

CVM-C10-FLEX-IN-485-I2

Panel-mounted power analyser with flexible Rogowski sensors

Code: M55963.

Specifications

AC power supply

Installation category	CAT III 300 V
Consumption	4 ... 6 VA
Frequency	50 ... 60 Hz
Nominal voltage	95 ... 240 V ~ ± 10%

DC power supply

Installation category	CAT III 300 V
Consumption	2 ... 6 W
Nominal voltage	105 ... 272 Vdc ± 10%

Mechanical characteristics

Size (mm) width x height x depth	96 x 96 x 60.9 (mm)
Envelope	Self-extinguishing V0 plastic
Fastening	Panel
Weight (kg)	0,268

Environmental characteristics

Protection class	IP 51 (Front), IP 64 (with accessory), IP 21 (rear)
Relative humidity (without condensation)	5 ... 95%
Storage temperature	-10... +50 °C
Operating temperature	-5 ... +45 °C

Standards

Certifications	UL, VDE
Electrical safety, Maximum height (m)	2000
Standards	UNE EN 61010, UNE EN 61000-6-3, UNE EN 61000-6-1, IEC 664, VDE 0110, UL 94, BS EN 61000-6-2, BS EN 61000-6-4

Current measurement circuit

Installation category	CAT III 300 V
Nominal current (In)	.../100 mV c.a
Neutral current measurement	.../100 mV~
Phase current measuring range	0.2 ... 200% In
Maximum input current consumption	0,004 VA
Maximum pulse current	2 In
Minimum current measurement	0,2 mV~

Voltage measurement circuit

CVM-C10-FLEX-IN-485-I2

Panel-mounted power analyser with flexible Rogowski sensors

Code: M55963.

Installation category	CAT III 300 V
Frequency measuring range	45 ... 65 Hz
Voltage measuring range	5 ...120% Un
Nominal voltage	300V Ph-N, 520V Ph-Ph
Minimum measurement voltage (Vstart)	15 V

User interface

LED	3 LED
Keyboard	3 keys
Display type	LCD Custom COG

Digital inputs

Input/output insulation	Optoisolated
Quantity	4
Type	NPN Potential-free contact

Measurement accuracy

Phase voltage measurement	0.5% ± 1 digit (Without sensors), ± 0.5% + 1 decimal (With sensors)

Serial communication

Protocol	ModBus/RTU, BACnet
Technology / Type	RS-485 / BACnet

CVM-C10-Flex
Power analyser 96 x 96 panel with flexible clamps

CODE	TYPE	Input current	Digital inputs	Communications	Protocol
M55963.	CVM-C10-FLEX-IN-485-I2	Rogowski	2	RS-485	Modbus/RTU | BACnet

Creation date: 13/03/2026 - CIRCUTOR, SAU reserves the right to make technical changes or modify the content/images of this document without prior notice, in order to improve its reliability, functionality, design or for other reasons.
It accepts no liability for any errors, inaccuracies or possible lack of information in this document.

CVM-C10-FLEX-IN-485-I2

Panel-mounted power analyser with flexible Rogowski sensors

Code: M55963.

Dimensions

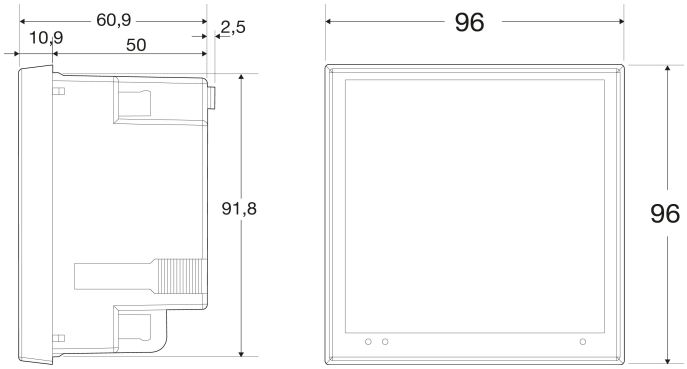

Connections

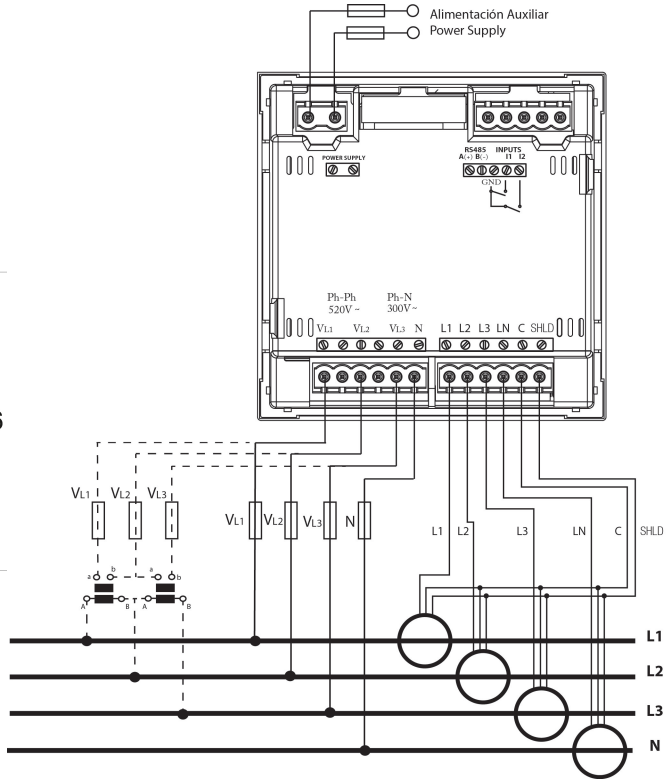

Creation date: 13/03/2026 - CIRCUTOR, SAU reserves the right to make technical changes or modify the content/images of this document without prior notice, in order to improve its reliability, functionality, design or for other reasons.
It accepts no liability for any errors, inaccuracies or possible lack of information in this document.