# CVM-C5-ITF-485-C

CVM-C5-ITF-485-C, Power analyzer

Code: M55884. **DESCATALOGADO**

> Protocol: Modbus/RTU
> Communications: RS-485
> Transistor output: 1
> Measuring current Channels: 3
> Input current: .../5 A | .../1 A
> Mounting: Pannel
> Modules: 96 x 96

## Description

The **CVM-C5** is a panel mounted (96 x 96 mm) multimeter that records energy values. Compact and intuitive, with 4-quadrant measurement (Consumption and Generation). The **CVM-C5** is suitable for Low Voltage installations, in both 3 and 4-wire three-phase circuits, two-phase circuits with or without neutral, single-phase circuits or ARON connections.

Display features and interface:

- Quick display of parameters with a single button
- Clearly displays the electric parameters of the installation
- Displays the electricity consumption value according to the cost per kWh
- kgCO2 consumption/generation indicator or according to the energy source
- Backlit LCD screen
- Operating hour indicator for preventive maintenance.

Other features:

- Modbus/RS-485 communications (optional)
- Measurement with **CIRCUTOR's MC** efficient current transformers or .../5 A, .../1 A or .../333 mV transformers.
- 1 digital output (S0 interface)
- 1 digital input (tariff or energy source selection)
- Maximum, minimum values and maximum demand.

## Application

- Recording and displaying the consumption of energy from two different sources (network/generator set).
- Generation of an impulse signal associated with the cost, $kgCO_2$ emissions or savings, according to the consumption or generation of energy.
- Generation of alarms with a transistor output; configurable parameters: Low/High, hysteresis (%), NO/NC, connection/disconnection delay and interlocking.

Creation date: 13/03/2026 - CIRCUTOR, SAU reserves the right to make technical changes or modify the content/images of this document without prior notice, in order to improve its reliability, functionality, design or for other reasons.
It accepts no liability for any errors, inaccuracies or possible lack of information in this document.

# CVM-C5-ITF-485-C

Multifunctional multimeter for panel

Code: M55884.

## Specifications

### AC power supply

| | |
|---|---|
| Installation category | CAT III 300 V |
| Consumption | 3.5 ... 6 VA |
| Frequency | 50 ... 60 Hz |
| Nominal voltage | 95 ... 240 V ~ ± 10% |

### DC power supply

| | |
|---|---|
| Installation category | CAT III 300 V |
| Consumption | 2 ... 6 W |
| Nominal voltage | 105 ... 272 Vdc ± 10% |

### Mechanical characteristics

| | |
|---|---|
| Size (mm) width x height x depth | 96 x 96 x 60.9 (mm) |
| Envelope | Self-extinguishing V0 plastic |
| Fastening | Panel |
| Weight (kg) | 0,237 |

### Environmental characteristics

| | |
|---|---|
| Protection class | IP 51 (Front), IP 20 (rear) |
| Relative humidity (without condensation) | 5...95% |
| Storage temperature | -10... +50 °C |
| Operating temperature | -5...+45 °C |

### Standards

| | |
|---|---|
| Certifications | UL/CSA 61010-1 3rd edition |
| Electrical safety, Maximum height (m) | 2000 |
| Standards | IEC 61010, UNE EN 61000-6-2, UNE EN 61000-6-4, |

### Current measurement circuit

| | |
|---|---|
| Installation category | CAT III 300 V |
| Nominal current (In) | .../5A , .../1 A |
| Phase current measuring range | 5...110% In |
| Maximum pulse current | 100 A |
| Minimum current measurement | 10 mA |

### Voltage measurement circuit

| | |
|---|---|
| Installation category | CAT III 300 V |
| Frequency measuring range | 45 ... 65 Hz |
| Voltage measuring range | 5 ...120% Un |

Creation date: 13/03/2026 - CIRCUTOR, SAU reserves the right to make technical changes or modify the content/images of this document without prior notice, in order to improve its reliability, functionality, design or for other reasons.
It accepts no liability for any errors, inaccuracies or possible lack of information in this document.

# CVM-C5-ITF-485-C

Multifunctional multimeter for panel

Code: M55884.

| | |
|---|---|
| Nominal voltage | 300V Ph-N, 520V Ph-Ph |
| Minimum measurement voltage (Vstart) | 10 V Ph-N |

## User interface

| | |
|---|---|
| Keyboard | 3 keys |
| Display type | LCD |
| Visible display area size | 60X54 mm |

## Digital transistor outputs

| | |
|---|---|
| Pulse width | 100 ms |
| Quantity | 1 |
| Type | NPN |
| Pulse output, time period (Ton / Toff) | 100 ms/100 ms |
| Maximum frequency | 5 imp / s |
| Maximum current | 50 mA |
| Maximum voltage | 24 Vdc |

## Measurement accuracy

| | |
|---|---|
| Phase voltage measurement | 0,50% |

## Serial communication

| | |
|---|---|
| Protocol | ModBus RTU |
| Technology / Type | RS-485 |

**CVM–C5**
Power analyzer, panel mounted 96x96

| CODE | TYPE | Input current | Transistor output | Digital inputs | Communications | Protocol |
|---|---|---|---|---|---|---|
| M55803. | CVM-C5-I-C | | | | | |
| M55823. | CVM-C5-MC-ITF-IC | | | | | |
| M55834. | CVM-C5-ITF-485-C | | | | | |
| M55853. | CVM-C5-IC | .../5 A \| .../1 A | 1 | 1 | | |
| M55873. | CVM-C5-MC-IC | | | | | |
| M55884. | CVM-C5-ITF-485-C | .../5 A \| .../1 A | 1 | | RS-485 | Modbus/RTU |
| M55894. | CVM-C5-MC-485-C | | | | | |
| M558940000V00 | CVM-C5-mV-485-C | | | | | |
| M55885. | CVM-C5-ITF-485-I | .../5 A \| .../1 A | | 1 | RS-485 | Modbus/RTU |
| M55895. | CVM-C5-MC-485-I | | | | | |
| M558950000V00 | CVM-C5-mV-485-I | | | | | |

# CVM-C5-ITF-485-C

Multifunctional multimeter for panel

Code: M55884.

4-quadrant measuring unit. Can be used to program the voltage transformer ratio



Creation date: 13/03/2026 - CIRCUTOR, SAU reserves the right to make technical changes or modify the content/images of this document without prior notice, in order to improve its reliability, functionality, design or for other reasons.
It accepts no liability for any errors, inaccuracies or possible lack of information in this document.

# CVM-C5-ITF-485-C

Multifunctional multimeter for panel

Code: M55884.
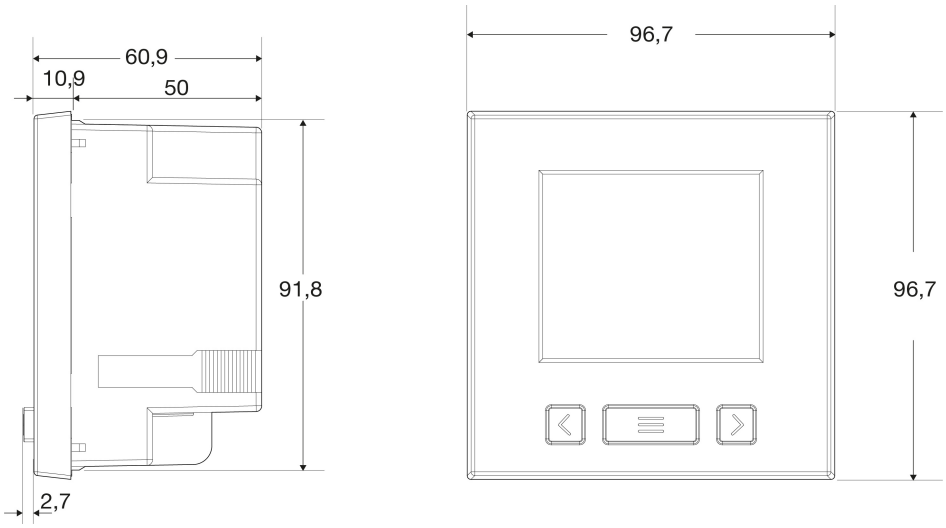
## Dimensions