YTC144AN 400V .../5A

YTC144AN 400V .../5A, Vattmeter

Code: M13243. **DESCATALOGADO**

> Scale: 90° P1
> System: Three-phase 4 wire
> Accuracy: 1,5
> Measure: 400 Vph-ph, .../5 A
> Device: YTC144AN
> Modules: 144x144

Description

- Does not need an auxiliary power supply
- DIN box with dimensions 96 and 144.
- Class 1.5
- Built-in electronic converter
- Balanced and unbalanced single and three-phase circuits.

Application

Measurement of the power factor in balanced or unbalanced single and three-phase circuits.

Creation date: 13/03/2026 - CIRCUTOR, SAU reserves the right to make technical changes or modify the content/images of this document without prior notice, in order to improve its reliability, functionality, design or for other reasons.
It accepts no liability for any errors, inaccuracies or possible lack of information in this document.

YTC144AN 400V .../5A

Wattmeters and varmeters

Code: M13243.

Specifications

Mechanical characteristics

Size (mm) width x height x depth	144 x 144 x 71.8 (mm)
Fastening	Panel
Weight (kg)	0,64

YMC / YTC
Single-phase and three-phase varmeters

CODE	TYPE	Scale	Accuracy	Modules	Device	Measure
Single-phase						
M13231.	YMC96 400V .../5A	90° P1	1,5	96x96	YMC96	400 Vph-ph, .../5 A
M13241.	YMC144 400V .../5A	90° P1	1,5	144x144	YMC144	400 Vph-ph, .../5 A
Balanced three-phase						
M13232.	YTC96E 400V .../5A	90° P1	1,5	96x96	YTC96E	400 Vph-ph, .../5 A
M13242.	YTC144E 400V.../5A	90° P1	1,5	144x144	YTC144E	400 Vph-ph, .../5 A
Three-phase 3 wire (ARON)						
M13234.	YTC96A 110V .../5A	90° P1	1,5	96x96	YTC96A	110 Vph-ph, .../5A
M13244.	YTC144A 110V.../5A	90° P1	1,5	144x144	YTC144A	110 Vph-ph, .../5A
Three-phase 4 wire						
M13233.	YTC96AN 400V .../5A	90° P1	1,5	96x96	YTC96AN	400 Vph-ph, .../5 A
M13243.	YTC144AN 400V .../5A	90° P1	1,5	144x144	YTC144AN	400 Vph-ph, .../5 A

Exchangeable scales for types YMC 96, YTC 96E and YTC 96A. Scale not included (*1) Specify primary voltage and current of the measuring transformers, and power at full scale

Creation date: 13/03/2026 - CIRCUTOR, SAU reserves the right to make technical changes or modify the content/images of this document without prior notice, in order to improve its reliability, functionality, design or for other reasons.
It accepts no liability for any errors, inaccuracies or possible lack of information in this document.

YTC144AN 400V .../5A

Wattmeters and varmeters

Code: M13243.

Dimensions

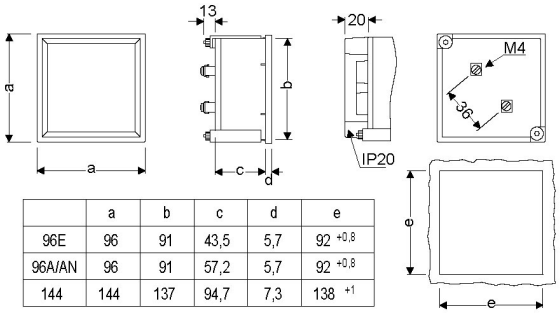

	a	b	c	d	e
96E	96	91	43,5	5,7	92 $^{+0,8}$
96A/AN	96	91	57,2	5,7	92 $^{+0,8}$
144	144	137	94,7	7,3	138 $^{+1}$
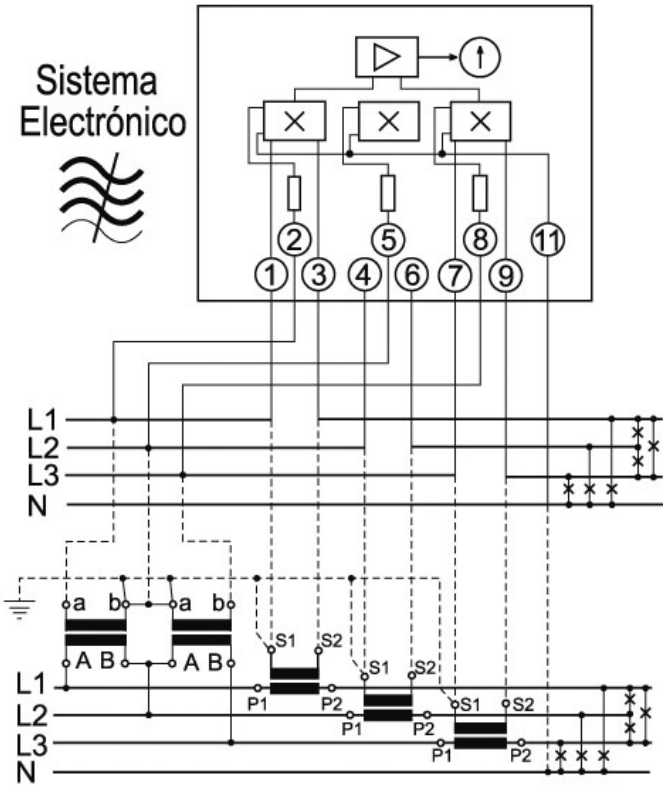
Connections