EC96 FA .../5 A

EC96 FA .../5 A, Ammeter

Code: M10531.

> Scale: 90°, P2
> Accuracy: 1,5
> Measurement Range (A): .../5 A
> Modules: 96x96

Description

- No need for auxiliary power supply, only the CEC 96 type.
- DIN boxes with dimensions: 48, 72, 96 and 144.
- Measurement in true root mean square 100 mA . 100 A
- Exchangeable scales for EC48, EC72, EC96, EM 45, EC 72 FA, EC 96 FA
- The alarm system can be fully configured for CEC 96

Application

In alternating current applications, to control the state of the current quickly and visually.

Creation date: 13/03/2026 - CIRCUTOR, SAU reserves the right to make technical changes or modify the content/images of this document without prior notice, in order to improve its reliability, functionality, design or for other reasons.
It accepts no liability for any errors, inaccuracies or possible lack of information in this document.

EC96 FA .../5 A

Code: M10531.

Specifications

Mechanical characteristics

Size (mm) width x height x depth	96 x 96 x 49.2 (mm)
Fastening	Panel
Weight (kg)	0,22

Environmental characteristics

Protection class	Panel: IP 52 (Front), IP 00 (Terminals)
Storage temperature	-25...+40 °C
Operating temperature	+10 ... +30 °C

Standards

Certifications	CE
Electrical safety, Maximum height (m)	2000
Standards	BS 89, UNE-EN 60051, IEC 144, DIN 43780, IEC 51, UNE 21318

Current measurement circuit

Consumption	0,3 ... 1,5 VA
Sampling frequency	20...100 Hz
Allowable overload	1,2 In permanent / 5 In during 30s / 10 In during 5s / 40 In during 1s

Electrical characteristics

Insulation voltage, circuit	2 KV, 50 HZ <1 min entre mecanismo y caja

Measurement accuracy

Accuracy	1,5 % FE

EC-FA-A
Ammeters with phase switch (ac), moving iron

CODE	TYPE	Scale	Accuracy	Measurement Range (A)	Modules
M10521.	EC72 FA .../5 A	90°, P2	1,5	.../5 A	72x72
M10531.	EC96 FA .../5 A	90°, P2	1,5	.../5 A	96x96

Creation date: 13/03/2026 - CIRCUTOR, SAU reserves the right to make technical changes or modify the content/images of this document without prior notice, in order to improve its reliability, functionality, design or for other reasons.
It accepts no liability for any errors, inaccuracies or possible lack of information in this document.

EC96 FA .../5 A

Code: M10531.

Dimensions

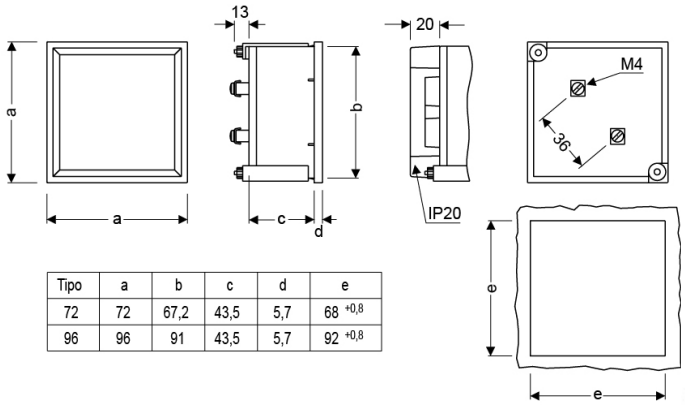

Tipo	a	b	c	d	e
72	72	67,2	43,5	5,7	68 +0,8
96	96	91	43,5	5,7	92 +0,8
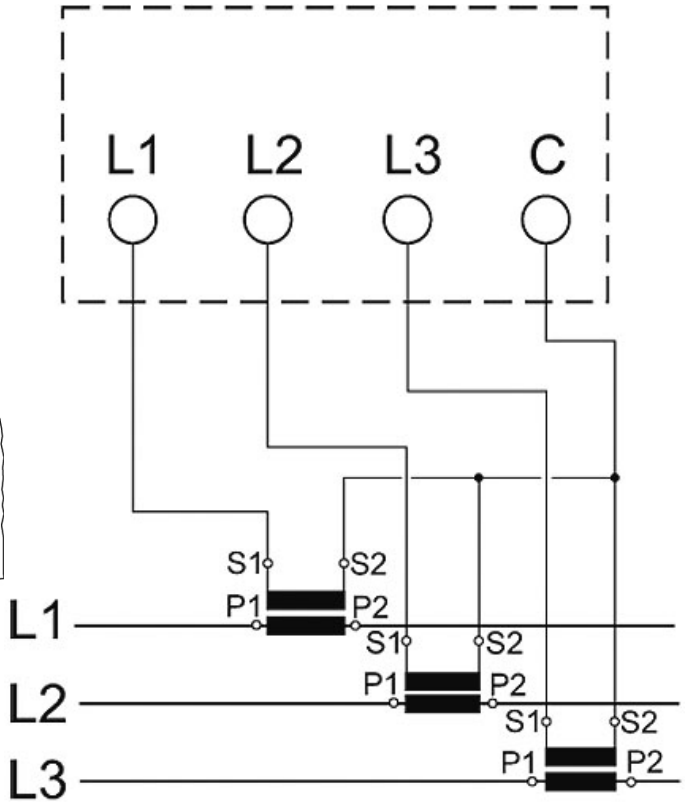
Connections