EM45 300V

EM45 300V, Voltmeter

Code: M10456. **DESCATALOGADO**

> Scale: 90° P1
> Accuracy: 1,5
> Measurement Range (V): 300

Description

- No need for auxiliary power supply
- Measurement in true root mean square or V ... 600 V ac
- Exchangeable scales

Application

In alternating current applications, to control the state of the voltage quickly and visually.

Creation date: 13/03/2026 - CIRCUTOR, SAU reserves the right to make technical changes or modify the content/images of this document without prior notice, in order to improve its reliability, functionality, design or for other reasons.
It accepts no liability for any errors, inaccuracies or possible lack of information in this document.

EM45 300V

Moving Iron Voltmeters

Code: M10456.

Specifications

Mechanical characteristics

Size (mm) width x height x depth	85 x 52 x 65 (mm)
Fastening	DIN rail
Weight (kg)	0,14

Environmental characteristics

Protection class	DIN rail: IP 52 (front), IP 00 (terminals)
Storage temperature	-25...+40 °C
Operating temperature	+10 ... +30 °C

Standards

Certifications	CE, UL
Electrical safety, Maximum height (m)	2000
Standards	BS 89, UNE-EN 60051, IEC 144, UL94, DIN 43780, IEC 51, UNE 21318

Voltage measurement circuit

Consumption	1 ... 4 VA
Sampling frequency	20 ... 100 Hz
Maximum permanent measurement voltage	1,5 Vn permanent rated voltage / 2 Vn during 5s

Electrical characteristics

Insulation voltage, circuit	2 kV, 50 Hz, 1 min entre mecanismo y caja

Measurement accuracy

Accuracy	1,5 % FE

EMSC-V
Moving Iron Voltmeters (ac)

CODE	TYPE	Scale	Accuracy
M10456.	EM45 300V	90° P1	1,5
M10476.	EMSC45 300V	90° P1	1,5
M10458.	EM45 500V	90° P1	1,5
M10478.	EMSC45 500V	90° P1	1,5
M10450.	EM45 .../110V	90° P1	1,5
M10470.	EMSC45 .../110V	90° P1	1,5

Exchangeable scales, Voltmeters 90°

Creation date: 13/03/2026 - CIRCUTOR, SAU reserves the right to make technical changes or modify the content/images of this document without prior notice, in order to improve its reliability, functionality, design or for other reasons.
It accepts no liability for any errors, inaccuracies or possible lack of information in this document.

EM45 300V

Moving Iron Voltmeters

Code: M10456.

Connections

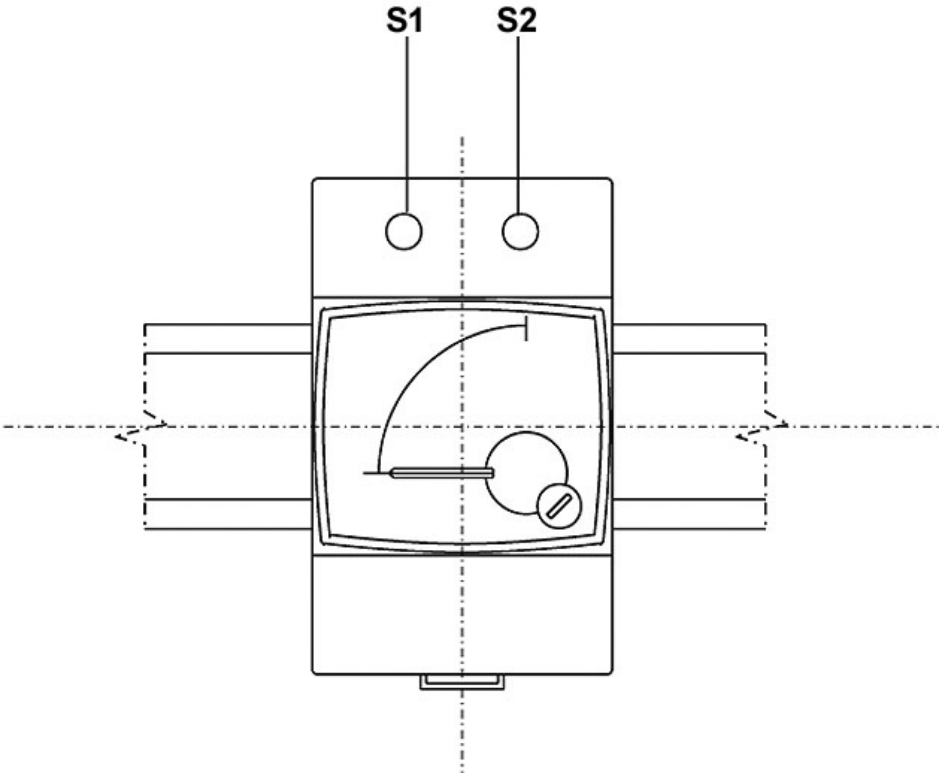

Creation date: 13/03/2026 - CIRCUTOR, SAU reserves the right to make technical changes or modify the content/images of this document without prior notice, in order to improve its reliability, functionality, design or for other reasons.
It accepts no liability for any errors, inaccuracies or possible lack of information in this document.